Big Blue® 400 and 500

Issued June 2012 • Index No. ED/10.8

Diesel Engine-Driven Welder/AC Generator

Quick Specs

Heavy Industrial Applications
Heavy Construction
Structural Steel
Maintenance and Repair Rigs
Mining Maintenance
Process Piping
Sheet Metal

Processes
Stick (SMAW)
MIG (GMAW)
Flux-Cored (FCAW)
DC TIG (GTAW)
Submerged Arc (SAW)
Stud Welding
Air Carbon Arc (CAC-A)
400:
Rated: 5/16-inch (8 mm) carbons
Capable: 3/8-inch (9.5 mm) carbons
500:
Rated: 3/8-inch (9.5 mm) carbons

Output Range
400 CC:	DC Stick 55–500 A	DC/TIG 55–500 A
400 CC/CV:	DC Stick 40–500 A	DC/TIG 15–350 A
	MIG/FCAW 14–40 V	
500 CC:	DC Stick 55–600 A	DC/TIG 55–600 A
500 CC/CV:	DC Stick 40–600 A	DC/TIG 20–425 A
	MIG/FCAW 14–40 V	

Generator Output Rated at 104° F (40° C)
5500 Watts Peak — 4000 Watts Continuous
400: 15,000 Watts 3-Phase/12,000 Watts 1-Phase*
500: 20,000 Watts 3-Phase/12,000 Watts 1-Phase*
**Deluxe models only.*

Accu-Rated™ – Not Inflated Generator Power

The Power of Blue®

Engine gauges standard on all models indicate engine oil pressure and coolant temperature.

Designed for fleet owners that demand the ultimate in reliability and performance.

Enclosed robust case design protects internal components from impact and allows air flow to cool and prolong the life of the engine. Also reduces sound levels.

Quick and easy maintenance with single-side access to oil level check, oil fill, oil filter, fuel filter and air cleaner.

Remote toolless oil drain allows oil to be drained without getting under the engine and reduces the chance of oil spillage.

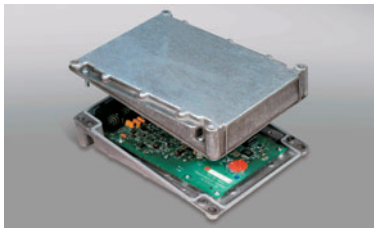

CC/CV Models: The Vault — ultimate control board reliability. See page 3.

EPA Tier 4i Compliant

DEUTZ

Perkins

BUILT TOUGH

Big Blue 500 CC/CV Deluxe Model shown.

Heavy-duty low-speed industrial diesel engines are designed, built and proven to operate over 10,000 hours before the first basic overhaul.

Meter maintenance displays
- Fuel gauge
- Hour meter function
- Oil change interval
- High coolant temperature and low oil pressure shutdowns
- Low fuel shutdown — engine shuts down before system runs out of fuel, making restarts easy.

Hot Start™ provides positive Stick electrode starts making it easy to start all types of electrodes and it also works great for bead tie-ins.

Arc-Drive™ makes welding easy. Automatically enhances Stick welding, especially on pipe, by focusing the arc and preventing the electrode from going out.

Weatherproof Lexan® nameplate resists cracking and fading, and is color-coded for ease of operation.

GFCI receptacle as required on most jobsites to protect operators from electrical hazards.

CSA, IEC, and NEMA compliant for welders. Degree of protection provided by enclosure IP23.

TRUE BLUE® 3 YR. WARRANTY

Welder/generator is warranted by Miller for 3 years, parts and labor.
Engine is warranted separately by engine manufacturer.

Miller®

Miller Electric Mfg. Co.
An Illinois Tool Works Company
1635 West Spencer Street
Appleton, WI 54914 USA

Equipment Sales US and Canada
Phone: 866-931-9730
FAX: 800-637-2315
International Phone: 920-735-4554
International FAX: 920-735-4125

Website
MillerWelds.com

ISO 9001 REGISTERED QUALITY SYSTEM

Big Blue® 400 and 500 CC Specifications (Subject to change without notice.)

Model	Welding Mode/Process	Weld Output Range	Weld Output Rated at 104˚F (40˚C)	Max. Open-Circuit Voltage	Generator Power Output Rated at 104˚F (40˚C)	Dimensions**	Weight (without fuel)***
Big Blue 400 CC	CC/DC (Stick/TIG)	55 – 500 A	400 A at 36 V (14.4 kW),* 100% Duty Cycle 450 A at 38 V (17.1 kW),* 60% Duty Cycle 500 A at 30 V (15 kW), 40% Duty Cycle	95	**Peak:** 5500 watts **Continuous:** 4000 watts, 1-phase, 34/17 A, 120/240 VAC, 50/60 Hz while welding	H: 43 in. (1092 mm) W: 28.5 in. (724 mm) D: 65.125 in. (1654 mm)	**Perkins:** 1545 lb. (701 kg) **Deutz:** 1655 lb. (751 kg)
Big Blue 500 CC	CC/DC (Stick/TIG)	55 – 600 A	500 A at 40 V (20 kW),* 100% Duty Cycle 550 A at 34 V (18.7 kW), 60% Duty Cycle 600 A at 30 V (18 kW), 40% Duty Cycle				**Deutz:** 1695 lb. (769 kg)

**Meets NEMA and IEC ratings. **Additional 7 in. (178 mm) to top of exhaust. ***Additional 190 lb. (86 kg) when fuel tank is full.*

Certified by Canadian Standards Association to both the Canadian and U.S. Standards.

Big Blue® 400 and 500 CC Control Panel

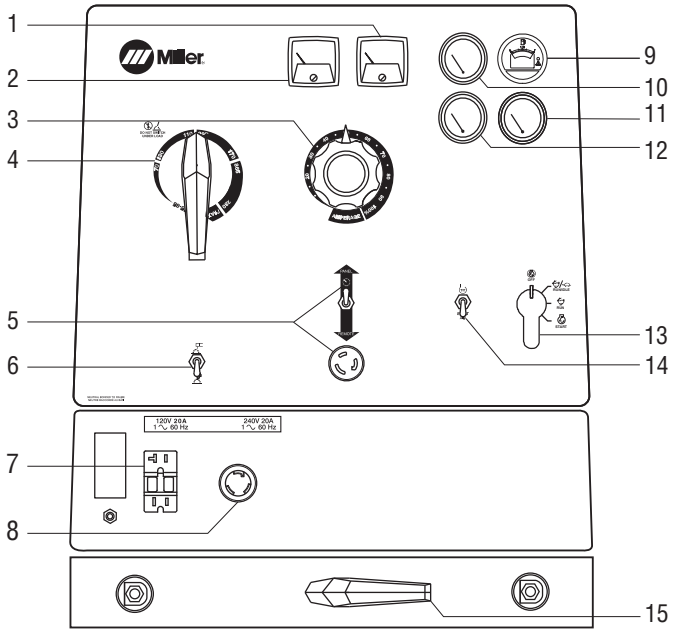

1. DC Ammeter*
2. DC Voltmeter*
3. Amperage Adjust Control
4. Amperage Range Switch
5. Amperage Adjust Switch and Remote Amperage Adjust Receptacle
6. Stick/TIG Selector Switch
7. 120 VAC, 20 A GFCI Duplex Receptacle
8. 240 VAC, 30 A TwistLock Receptacle (NEMA L6-30)
9. Fuel Gauge/Hour Meter/Oil Change Interval Engine Shutdown Indicator
10. Engine Oil Pressure Gauge
11. Battery/Voltmeter*
12. Engine Coolant Temperature Gauge
13. Engine Control Switch
14. Starting Aid Switch (standard on Perkins model)
15. Polarity Switch*

**Optional.*

Additional Features

Proven, rugged rheostat control technology that has been in Miller engine drives for over 60 years. Contains no printed control boards.

A **Stick/TIG switch** optimizes open-circuit voltage for Stick welding and allows the open-circuit voltage to be lowered for scratch start TIG welding.

Provisions are provided to plug a **RHC3GD34A remote control** that will allow precise adjustment of amperage without walking back to the machine.

Big Blue® 400 and 500 CC/CV Specifications (Subject to change without notice.)

Model	Welding Mode/Process	Weld Output Range	Weld Output Rated at 104˚F (40˚C)	Max. Open-Circuit Voltage	Generator Output Rated at 104˚F (40˚C)	Dimensions**	Weight (without fuel)***
Big Blue 400 CC/CV	CC/DC (Stick/TIG)	15–500 A	400 A at 36 V (14.4 kW),* 100% Duty Cycle 450 A at 38 V (17.1 kW),* 60% Duty Cycle 500 A at 34 V (17 kW), 40% Duty Cycle	95	**Peak:** 5500 watts **Continuous:** 4000 watts, 1-phase, 34/17 A, 120/240 VAC, 50/60 Hz while welding **Additional Generator Power for Deluxe Models (while NOT welding)** **Big Blue 400:** 3-phase: 15 kW, 36 A, 240 VAC **or** 1-phase: 12 kW, 50 A, 120/240 VAC **Big Blue 500:** 3-phase: 20 kW, 48 A, 240 VAC **or** 1-phase: 12 kW, 50 A, 120/240 VAC	H: 43 in. (1092 mm) W: 28.5 in. (724 mm) D: 65.125 in. (1654 mm)	**Perkins:** 1545 lb. (701 kg) **Deutz:** 1655 lb. (751 kg)
	CV/DC (MIG/FCAW)	14–40 V					
Big Blue 500 CC/CV	CC/DC (Stick/TIG)	20–600 A	500 A at 40 V (20 kW),* 100% Duty Cycle 550 A at 42 V (23.1 kW), 60% Duty Cycle 600 A at 34 V (20.4 kW), 40% Duty Cycle				**Deutz:** 1695 lb. (769 kg)
	CV/DC (MIG/FCAW)	14–40 V					

*Meets NEMA and IEC ratings. **Additional 7 in. (178 mm) to top of exhaust. ***Additional 190 lb. (86 kg) when fuel tank is full.

Certified by Canadian Standards Association to both the Canadian and U.S. Standards.

Big Blue® 400 and 500 CC/CV Control Panel

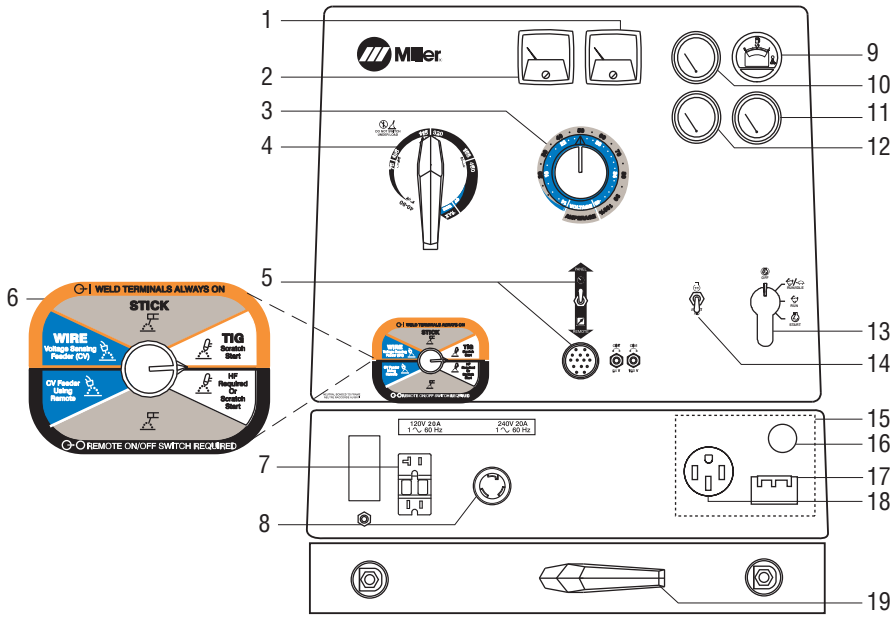

1. DC Ammeter
2. DC Voltmeter
3. Amperage/Voltage Adjust Control
4. Amperage Range Switch
5. Amperage/Voltage Adjust Switch and Remote Amperage/Voltage Adjust Receptacle
6. Process/Contactor Selector Switch
7. 120 VAC, 20 A GFCI Duplex Receptacle
8. 240 VAC, 30 A TwistLock Receptacle (NEMA L6-30)
9. Fuel Gauge/Hour Meter/Oil Change Interval Engine Shutdown Indicator
10. Engine Oil Pressure Gauge
11. Battery/Voltmeter*
12. Engine Coolant Temperature Gauge
13. Engine Control Switch
14. Starting Aid Switch (standard on Perkins model)
15. 3-Phase Power Generator Option
16. Strain Relief
17. 50 A, 3-Phase Circuit Breaker
18. 50 A, 120/240 V Receptacle (NEMA 14-50)
19. Polarity Switch*

Optional.

Additional Features

One MIG welding range allows precise voltage control for welding with .023–.120 inch (0.6–3.2 mm) wires.

A multi-colored **process selector control** allows quick and easy process changes without having to use multiple switches.

14-pin remote control allows precise adjustment of amperage or voltage, along with contactor control, without walking back to the machine.

The Vault — Superior Circuit Board Design
Our critical circuit boards are engineered to carry *low power* and *low heat* to reduce thermal stress and minimize expansion and contraction. In contrast, our competitor's boards carry *high power* and *high heat*, making them more vulnerable to failure.

"The Vault" Makes Upgrading to Miller® CC/CV Units Worry-Free
Concerns with circuit board reliability have resulted in some operators steering clear of CC/CV welder/generators — even though they offer a superior arc and multiple welding processes. Miller circuit board reliability isn't a concern since all Big Blue multiprocess industrial engine drives feature the Vault.

Created out of two aluminum halves sealed with silicone, as well as watertight harness connections, the Vault provides a clean circuit

board environment, protecting the electronics — and controlling output — in heavy industrial applications. No other competitor protects their electronics with a sealed vault, leaving critical circuit boards exposed to harsh elements that can disrupt the machine's electronics, and therefore, its operation.

Big Blue® 400 and 500 CC Performance Data

400 CC
VOLT/AMP CURVES – STICK MODE

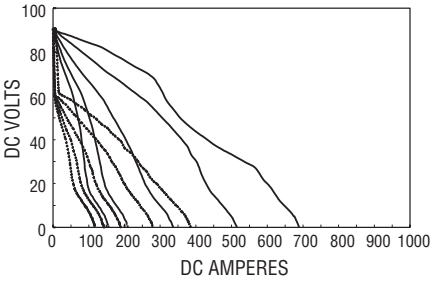

500 CC
VOLT/AMP CURVES – STICK MODE

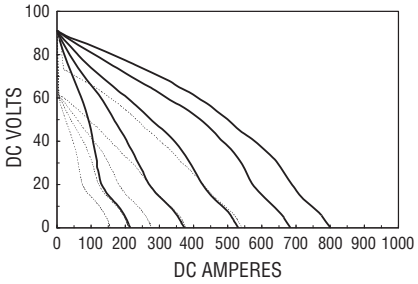

GENERATOR POWER CURVE

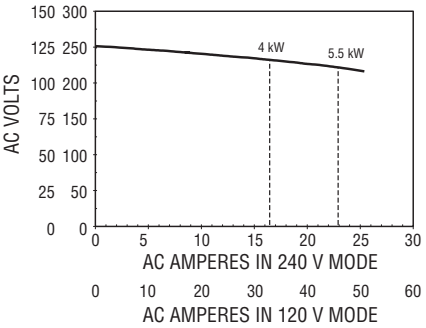

FUEL CONSUMPTION CURVE

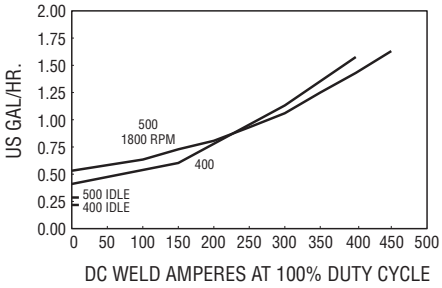

DUTY CYCLE CURVE

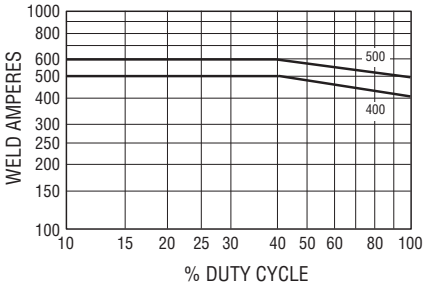

Big Blue® 400 and 500 CC/CV Performance Data

400 CC/CV
VOLT/AMP CURVES – STICK MODE

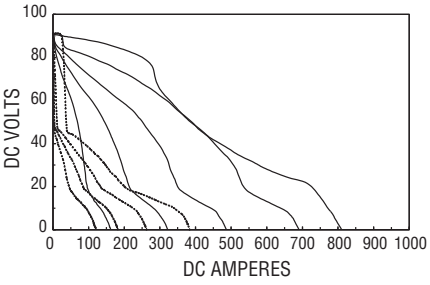

500 CC/CV
VOLT/AMP CURVES – STICK MODE

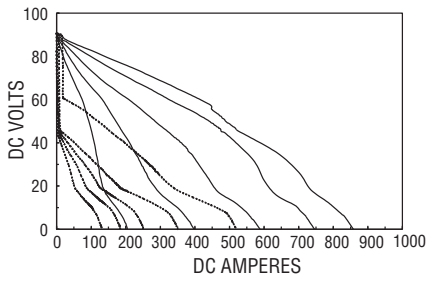

3-PHASE GENERATOR
POWER CURVE

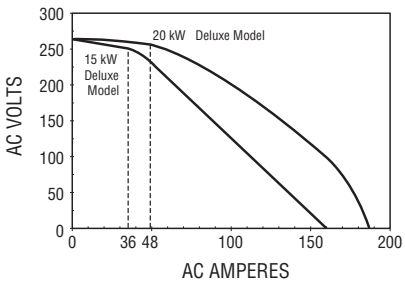

400 CC/CV
VOLT/AMP CURVES – MIG MODE

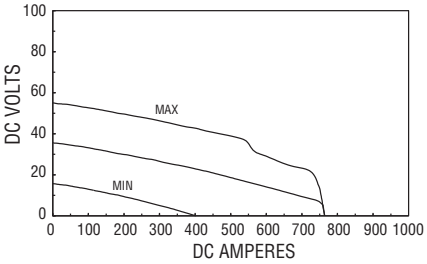

500 CC/CV
VOLT/AMP CURVES – MIG MODE

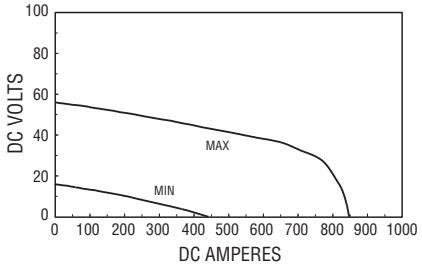

DUTY CYCLE CURVE

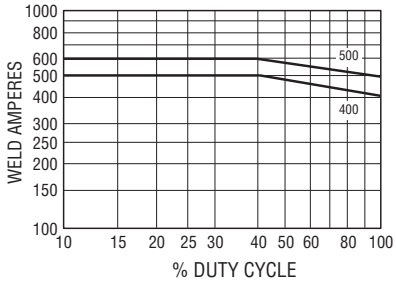

400 CC/CV
VOLT/AMP CURVES – TIG MODE

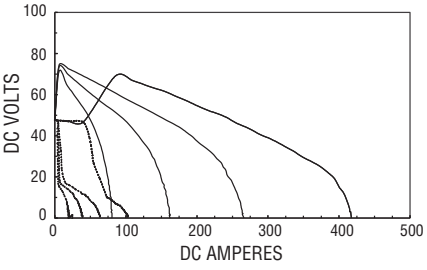

500 CC/CV
VOLT/AMP CURVES – TIG MODE

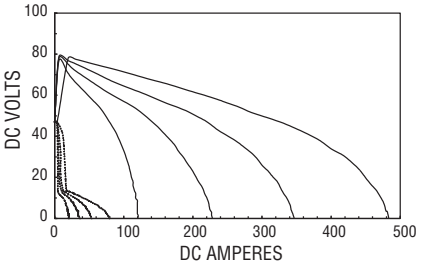

FUEL CONSUMPTION CURVE

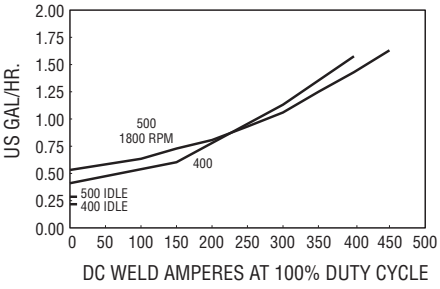

Miller

Engine Specifications (Subject to change without notice.)

Model	Engine Brand	Features	HP	Type	Engine Speeds	Capacities	Automatic Engine Shutdowns
Big Blue 400	Perkins 404D.22	EPA Tier 4i compliant, indirect-injected, liquid-cooled engine with full load **sound levels** of **73.2 dB** @ 7 m (98 Lwa). Right-side service access with intervals of **500 hours** for **oil** and **filters**.	32.6	4-cylinder, industrial, liquid-cooled diesel	Weld: 1850 RPM Idle: 1250 RPM*	Fuel: 25 gal. (95 L) Oil: 9 qt. (8.5 L) Coolant: 9 qt. (8.5 L)	Low Oil Pressure, High Coolant Temperature, Low Fuel Level
	Deutz D2011L03i	EPA Tier 4i compliant, direct-injected, air/oil-cooled engine with full load **sound levels** of **76.8 dB** @ 7 m (101.7 Lwa). Right-side service access with intervals of **1000 hours** for **oil** and **filters**. Approved **underground** operation with the purchase of a **MSHA** (30 CFR part 7) certificate.	32.0	3-cylinder, industrial, air/oil-cooled diesel	Weld: 1850 RPM Idle: 1250 RPM*	Fuel: 25 gal. (95 L) Oil: 6.2 qt. (5.9 L) Coolant: Integrated oil	Low Oil Pressure, High Coolant Temperature, Low Fuel Level
Big Blue 500	Deutz D2011L04i	EPA Tier 4i compliant, direct-injected, air/oil-cooled engine with full load **sound levels** of **76 dB** @ 7 m (101 Lwa). Right-side service access with intervals of **1000 hours** for **oil** and **filters.**	48.6	4-cylinder, industrial, air/oil-cooled diesel	Weld: 1850 RPM Idle: 1250 RPM*	Fuel: 25 gal. (95 L) Oil: 9 qt. (8.5 L) Coolant: Integrated oil	Low Oil Pressure, High Coolant Temperature, Low Fuel Level

**Optional on select models.*

Genuine Miller® Options

Weld Ammeter and Voltmeter Kit
#195 131 Field
Panel-mounted analog meters monitor welding output.
Installation time: 35 minutes

Battery Voltmeter
#195 454 Field
Monitors battery charging circuit.

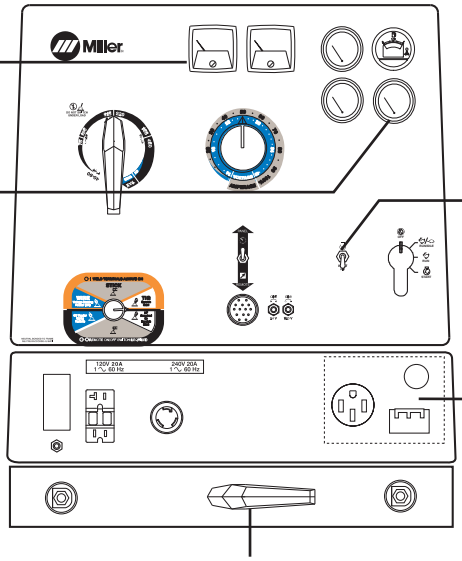

Polarity Reversing Switch Kit
#043 942 Field
Changes DC polarity without the use of tools.
Installation time: 35 minutes

AC/DC Polarity Reversing Switch Kit
#195 095 Field
Select AC output or DC polarity without the use of tools.

Cold Weather Starting Aid Kit
Note: Perkins 404D.22 models come standard with glow plugs.

#195 056 Field
Perkins. 120 V block heater.

#195 307 Field
Deutz D2011L03i/D2011L04i. 12 V intake manifold heater.

#195 086 Field
Deutz D2011L03i/D2011L04i. 120 V oil pan heater.

3-Phase Power Generator Factory (Deluxe CC/CV model only)
For Big Blue 400 CC/CV. 15,000 watts.
For Big Blue 500 CC/CV. 20,000 watts.

Adds three-phase, 240 V power to CC/CV units. 12 kW, 120/240 V single-phase power from a 50-amp receptacle. Optimum kW performance achieved while not welding. This option also includes a 50-amp on/off circuit breaker for both single- and three-phase power, and a strain relief for hard wiring into the unit.

Note: Available as factory option. See Ordering Information on back page.

For matching plug, order #119 172

Genuine Miller® Accessories

Full KVA Plug Kit #119 172 Field
1-phase, 120/240 VAC, 50 A plug (NEMA 14-50P) to fit full KVA receptacle.

Engine Filter Kit
#246 988 Field. For Deutz
#246 985 Field. For Perkins
Includes all filters required for proper engine maintenance. Oil filter, primary and secondary fuel filter, and primary air filter.

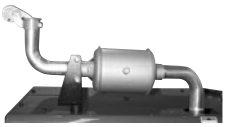

Spark Arrestor Muffler Kit
#195 012 Field
Prevents particles from leaving the muffler that could potentially start a fire. Mandatory when operating on California grasslands, brush, or forest-covered land, and in all National Forests. For other areas, check your state and local laws. Meets U.S. Forest Service standard 5100-1B.

FA-1D Lockable Flame Arrestor Fuel Cap #043 947 Field
Fuel cap can be padlocked to prevent vandalism. A built-in flame arrestor prevents flames or sparks from entering the fuel tank.

Vandalism Lockout Kit
#195 118 Field
Lockable hinged steel panels cover and protect name plate gauges and ignition switch (padlock included). Also includes engine compartment door lock and key.

Cable Holder
#043 946 Field
Saddle-bag-style cable holder. Convenient wrap-around storage of coiled cable for transportation. Stores 100 feet of 2/0 cable on each side.

Note: For best results do not weld when cable is coiled! Protective cover cannot be used with cable holder.

Protective Cover
#194 683 Field
Blue water-resistant canvas cover resists stains and mildew, and protects the finish of your welder.

Note: Protective cover cannot be used with cable holder.

Stick (SMAW) Welding

Weld Leads
2/0 Stick Cable Set, 50 ft. (15 m)
#173 851
Consists of 50-foot (15 m) 2/0 electrode cable with holder, and 50-foot (15 m) work cable with clamp. 350 A, 100% duty cycle.

2/0 Stick Cable Set, 100/50 ft. (30.5/15 m)
#043 952
Consists of 100-foot (30.5 m) 2/0 electrode cable with holder, and 50-foot (15 m) work cable with clamp. 300 A, 100% duty cycle.

MIG (GMAW) or Flux-Cored (FCAW)

SuitCase® X-TREME™ 8VS Wire Feeder
#951 182
SuitCase® X-TREME™ 12VS Wire Feeder
#951 184
Lightweight, voltage-sensing wire feeders include secondary contactor, gas valve and drive roll kit. See Lit. Index No. M/6.41.

SuitCase® 8RC Wire Feeder #951 186
SuitCase® 12RC Wire Feeder #951 188
Lightweight and flexible enough to run a variety of wires up to .062-inch diameter. Includes remote voltage control and drive roll kit. See Lit. Index No. M/6.5.

MIG (GMAW)/Flux-Cored (FCAW) Guns
Miller produces a complete line of dependable MIG guns. See Lit. Index Nos. AY/15.0, AY/16.0 and AY/17.0.

Spoolmatic® 30A Spool Gun
#130 831
Air-cooled, 200-amp, 1-pound spool gun for aluminum MIG. See Lit. Index No. M/1.73.

WC-24 Control #137 549
Use with Spoolmatic 30A.

XR™ Wire Feeders and Guns
Push-pull system designed to handle difficult-to-feed soft alloy wires such as aluminum. See Lit. Index No. M/1.7, M/1.71, and M/1.73.

TIG (GTAW) Welding

Dynasty® 200 Series
For premium portable AC/DC TIG arc quality. See Lit. Index No. AD/4.8.

HF-251 Series
#042 388
HF-251D-1, 115 VAC
#042 387
HF-251D-2, 230 VAC
High-frequency arc starter and stabilizer. See Accessory Lit. Index No. AY/5.0.

Plasma Cutting

Spectrum 375 X-TREME and 625 X-TREME shown.

Spectrum® 375 X-TREME™ #907 529
See Lit. Index No. PC/9.2.
Spectrum® 625 X-TREME™ #907 531
See Lit. Index No. PC/9.6.
Spectrum® 875 #907 390-01-1
See Lit. Index No. PC/9.8.

The Spectrum 375 X-TREME and 625 X-TREME come complete with protective X-CASE™ (not shown).

Genuine Miller® Accessories (Continued)

Remote Controls (CC models only)

RHC-3GD34A Remote Hand Control #041 122
Allows for precise adjustment of amperage. Includes 20-foot (6 m) cord.

Remote Controls (CC/CV models)

RHC-14 Hand Control #242 211 020
Miniature hand control for remote current, voltage and contactor control. Dimensions: 4 x 4 x 3.25 inches (102 x 102 x 82 mm). Includes 20-foot (6 m) cord and 14-pin plug.

RFCS-14 HD Foot Control #194 744
Heavy-duty foot control for remote current, voltage and contactor control. Includes 20-foot (6 m) cord and 14-pin plug.

RMLS-14 #129 337
Fingertip momentary- and maintained-contact rocker switch for contactor control. Push forward for maintained contact and back for momentary contact. Includes 26.5-foot (8 m) cord and 14-pin plug.

RCC-14 Remote Contactor and Current Control #151 086
Side-to-side rotary-motion fingertip control fastens to TIG torch using two Velcro® straps. Includes 26.5-foot (8 m) cord and 14-pin plug.

RCCS-14 Remote Contactor and Current Control #043 688
Up-and-down rotary-motion fingertip control fastens to TIG torch using two Velcro® straps. Includes 26.5-foot (8 m) cord 14-pin plug.

Extension Cables for 14-Pin Remote Controls or 24 VAC Wire Feeders
#242 208 025 25 ft. (7.6 m)
#242 208 050 50 ft. (15.2 m)
#242 208 080 80 ft. (24.4 m)

Trailers and Hitches (Note: Trailers are shipped unassembled.)

4 West Four-Wheel Steerable Off-Road Trailer #042 801
A heavy-duty 2570-pound (1166 kg) capacity trailer designed for use in mines, quarries, and other rough terrain. Has narrow 22-foot (6.7 m) turning radius. Includes 3-inch (76 mm) lunette eye, universal hitch and safety chains.

HWY-224 Trailer
#043 805 For highway use.
OFR-224 Trailer
#043 802 For off-road use.
A 2650-pound (1202 kg) capacity trailer. Welded steel tubing frame, heavy-duty axle with roller bearing hubs and leaf-spring suspension. Includes jack stand and 2-inch (50 mm) ball hitch. *HWY-224 also includes fenders and lights.*

Cable Tree #043 826
Provides an area to conveniently wrap weld cables and extension cords.

Dual Hitch #300 831
2-inch (50 mm) ball hitch and 3-inch (76 mm) lunette eye in one reversible assembly.

Mounting Specifications

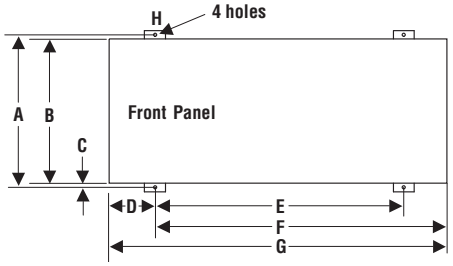

A. 29.812 in. (757 mm)
B. 27.5 in. (699 mm)
C. 1 in. (25 mm)
D. 9.625 in. (244 mm)*
E. 46.5 in. (1181 mm)*
F. 56 in. (1422 mm)*
G. 65.125 in. (1654 mm)
H. .562 in. (14 mm) diameter

Height: 50 in. (1270 mm) *(to top of exhaust)*
Width: 28.5 in. (724 mm)
(mounting brackets turned in)
30.75 in. (781 mm)
(mounting brackets turned out)
Depth: 65.125 in. (1654 mm)

**With mounting brackets in center position. Dimensions vary with location of mounting brackets.*

Trailer Specifications (Subject to change without notice.)

Model	Gross Axle Weight Rating	Gross Vehicle Weight Rating	Net Payload	Height of Bed	Road Clearance	Track (Center to center of tires)	Standard Tires (Standard rating or P-size rating)	Dimensions	Net Weight
4 West	2000 lb./axle (907 kg/axle)	3000 lb. (1361 kg)	2570 lb. (1166 kg)	21.25 in. (540 mm)	8 in. (203 mm)	55.25 in. (1403 mm)	B78-13	Length: 91 in. (2311 mm)* Width: 61.25 in. (1556 mm)	430 lb. (195 kg)
HWY-224 OFR-224	3500 lb. (1588 kg)	2960 lb. (1343 kg)	2650 lb. (1202 kg)	18.5 in. (470 mm)	7.5 in. (191 mm)	52 in. (1321 mm)	B78-13	Length: 105 in. (2667 mm) Width: HWY – 59.5 in. (1511 mm)** OFR – 58.438 in. (1484 mm)	320 lb. (145 kg)

**Does not include tongue. **Width at outside of fenders.*

Ordering Information

Equipment and Factory Options	Stock No.	Description	Qty.	Price
Big Blue® 400 CC	**#907 173** **#907 175**	Deutz D2011L03i with Engine Gauges Perkins 404D.22 with Engine Gauges		
Big Blue® 400 CC/CV Deluxe Model	**#907 327** **#907 329**	Deutz D2011L03i with Engine Gauges, Automatic Idle, Weld Meters and 15 kW Perkins 404D.22 with Engine Gauges, Automatic Idle, Weld Meters and 15 kW		
Big Blue® 500 CC	**#907 181**	Deutz D2011L04i with Engine Gauges		
Big Blue® 500 CC/CV Deluxe Model	**#907 331**	Deutz D2011L04i with Engine Gauges, Automatic Idle, Weld Meters and 20 kW		
Field Accessories				
Weld Ammeter and Voltmeter Kit	**#195 131**	For all models. Analog welding meters		
Battery Voltmeter	**#195 454**	For all models. Analog		
Polarity Reversing Switch Kit	**#043 942** **#195 095**	For all models. DC polarity switch For all models. AC/DC polarity switch		
Cold Weather Starting Kit	**#195 056** **#195 307** **#195 086**	Perkins. 120 V block heater Deutz. 12 V intake manifold heater Deutz. 120 V oil pan heater		
Full KVA Plug Kit	**#119 172**	1-phase, 120/240 VAC, 50 A		
Engine Filter Kit	**#246 988** **#246 985**	Deutz. Includes air, oil and fuel filters Perkins. Includes air, oil and fuel filters		
Spark Arrestor Muffler Kit	**#195 012**	For all models. Horizontal externally mounted		
Lockable Flame Arrestor Fuel Cap	**#043 947**	For all models. Padlock not included		
Vandalism Lockout Kit	**#195 118**	For all models. Lockable front control panel and engine compartment		
Cable Holder	**#043 946**	For all models. Stores up to 200 ft. of 2/0 weld cable		
Protective Cover	**#194 683**	For all models. **Will not work with cable holder accessory**		
Stick Welding Leads		See page 6		
MIG/Flux-Cored Welding				
SuitCase® X-TREME™ 8VS and 12VS	**#951 182/#951 184**	See Lit. Index No. M/6.41		
SuitCase® 8RC and 12RC	**#951 186/#951 188**	See Lit. Index No. M/6.5		
MIG (GMAW)/Flux-Cored (FCAW) Guns		See Lit. Index Nos. AY/15.0, AY/16.0 and AY/17.0		
Spoolmatic® 30A Spool Gun	**#130 831**	Requires WC-24 Control. See Lit. Index No. M/1.73		
WC-24 Control	**#137 549**	See Lit. Index No. M/1.5		
XR™ Wire Feeder Control and Guns		See Lit. Index No. M/1.7, M/1.71, and M/1.73		
TIG Welding				
Dynasty® 200 Series		See Lit. Index No. AD/4.8		
High-Frequency Arc Starters		See Lit. Index No. AY/5.0		
Plasma Cutting				
Spectrum® 375 X-TREME™	**#907 529**	Includes X-CASE™. See Lit. Index No. PC/9.2		
Spectrum® 625 X-TREME™	**#907 531**	Includes X-CASE™. See Lit. Index No. PC/9.6		
Spectrum® 875	**#907 390-01-1**	See Lit. Index No. PC/9.8		
Remote Controls	See page 7			
Trailers and Hitches				
4 West Four-Wheel Steerable Trailer	**#042 801**	Trailer with lunette eye, universal hitch and safety chains. For off-road use		
HWY-224 Trailer	**#043 805**	Trailer with lights, fenders and 2-in. (50 mm) ball hitch. For highway use		
OFR-224 Trailer	**#043 802**	Trailer with 2-in. (50 mm) ball hitch. For off-road use		
Cable Tree	**#043 826**	Trailer mounted cable holder for HWY-224 or OFR-224		
Dual Hitch	**#300 831**	Combination 2-in. (50 mm) ball hitch and 3-in. (76 mm) lunette eye in one reversible assembly. For HWY-224 or OFR-224		

Date: **Total Quoted Price:**

Miller®

Litho in USA

Distributed by:

NASCO-OP™
Power of Numbers
800-321-3396